Technical Data Sheet
00816-0100-3250, Rev HA
October 2017

Rosemount™ 8800 Vortex Installation Effects

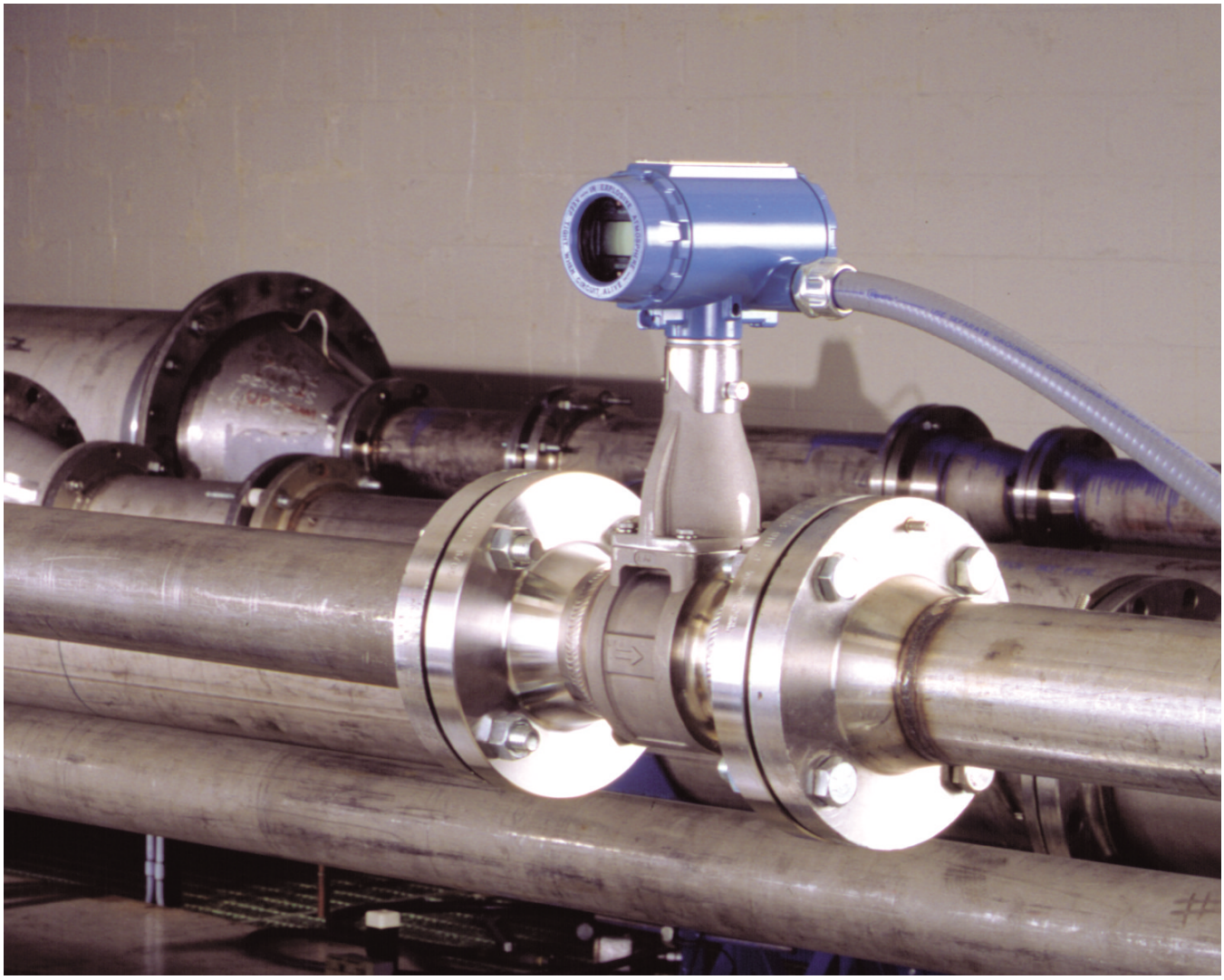

ROSEMOUNT™

EMERSON™

Contents

Chapter 1 Introduction 1
1.1 Temperature effects on K-factor 1
1.2 Pipe ID effects on K-factor 2
1.3 Upstream and downstream piping configurations 2
1.4 In plane versus out of plane 3
Chapter 2 Correcting the output of the vortex meter 5
2.1 Fieldbus and HART software revisions 5.2.8 or earlier 5
2.2 HART software revisions 5.3.1 or 7.2.1 and later 7
2.3 Correction factor examples 9
Chapter 3 Calculating upstream and downstream pipe diameters 17

1 Introduction

Topics covered in this chapter:

- *Temperature effects on K-factor*
- *Pipe ID effects on K-factor*
- *Upstream and downstream piping configurations*
- *In plane versus out of plane*

The Rosemount 8800 Vortex Flowmeter provides methods for maintaining accuracy in less than ideal installations.

In designing the 8800, Emerson tested the meter for three separate types of installation effects:

- Process fluid temperature variation
- Process piping inside diameter
- Upstream and downstream disturbances

As a result of this testing, compensation factors are included in the vortex meter software; this allows the output of the vortex meter to be adjusted for the actual process temperature and process piping being used.

Data is presented in this paper to demonstrate the effectiveness of the design in limiting the errors resulting from piping disturbances. For upstream disturbances caused by pipe elbows, contractions, expansions, etc., Emerson has conducted extensive research in a flow lab to determine the effect that these have on the meter output. These tests are the basis for the recommended 35 upstream piping diameters. While this is optimal, it is not always possible in the real world of plant design and layout. Therefore, the data presented in this paper outlines the effects of different upstream and downstream piping conditions on the vortex flowmeter.

1.1 Temperature effects on K-factor

The vortex flowmeter is fundamentally a velocity measuring device. As fluid flows past the shedder bar, vortices are shed in direct proportion to the fluid velocity. If the process temperature is different than the reference calibration temperature, the flowmeter bore diameter will change slightly. As a result, the velocity across the shedder bar will also change slightly. For example; an elevated process temperature will cause an increase in the bore diameter, which in turn will cause a decrease in the velocity across the shedder bar.

Using the *Reference K-factor* and the value for *Process Temperature* input by the user, the Rosemount 8800 automatically calculates for the effect of temperature on the flowmeter by creating what is called the *Compensated K-factor*. The *Compensated K-factor* is then used as the basis for all flow calculations.

1.2 Pipe ID effects on K-factor

All Rosemount 8800 Vortex Flowmeters are calibrated in schedule 40 pipe. From extensive testing done in piping with different inside diameters/schedules, Emerson has observed there is a small K-factor shift for changes in process pipe ID (inside diameter). This is due to the slight change in velocity at the inlet to the flowmeter.

These changes have been programmed in to the 8800 electronics and will be corrected for automatically when the user supplied pipe ID is other than schedule 40.

1.3 Upstream and downstream piping configurations

The number of possible upstream and downstream piping configurations is infinite. Therefore, it is not possible to have software automatically calculate a correction factor for changes in upstream piping. Fortunately, in almost all cases, elbows, reducers, etc. cause less than a 0.5% shift in the flowmeter output. In many cases, this small effect is not a large enough shift to cause the reading to be outside of the accuracy specification of the flowmeter.

The shifts caused by upstream piping configurations are basically due to the changes in the inlet velocity profile caused by upstream disturbances. For example, as a fluid flows around an elbow, a swirl component is added to the flow. Because the factory calibration is done in a fully-developed pipe flow, the swirl component caused by the elbow will cause a shift in the vortex flowmeter output. Given a long enough distance between an elbow and the flowmeter, the viscous forces in the fluid will overcome the inertia of the swirl and cause the velocity profile to become fully-developed. There rarely is sufficient length in actual process piping installations for this to occur. Even though the flow profile may not be fully-developed, testing indicates that the Rosemount vortex flowmeter can be located within 35 pipe diameters of the elbow with minimal effect on the accuracy or repeatability of the flowmeter.

Although the upstream disturbance may cause a shift in the K-factor, the repeatability of the vortex flowmeter is normally not affected. For example, a flowmeter 20 pipe diameters downstream of a double elbow will be as repeatable as a flowmeter in a straight pipe. Testing also indicates that while the K-factor is affected by upstream piping, the linearity of the flowmeter remains within design specifications.

In many applications, this means that no adjustment for piping configuration will be necessary — even when the minimum recommended installation lengths of upstream and downstream piping cannot be used.

On the following pages are drawings illustrating various installation configurations. Extensive testing has been performed in a flow lab with these specific configurations. The results of those tests are shown as a series of graphs indicating the shift in the mean K-factor for a vortex flowmeter placed downstream of a flow disturbance.

1.4 In plane versus out of plane

In the graphics, the terms *in plane* and *out-of-plane* are used. A butterfly valve and a vortex flowmeter are considered to be *in plane* when the shaft of the valve and the shedder bar of the vortex flowmeter are aligned (e.g. both the shaft and the shedder bar are vertical.)

- A butterfly valve and a vortex flowmeter are considered to be *in plane* when the shaft of the valve and the shedder bar of the vortex flowmeter are aligned (e.g. both the shaft and the shedder bar are vertical). They are considered out of plane the shaft and shedder bar are offset by 90°.

Figure 1-1: Butterfly valve

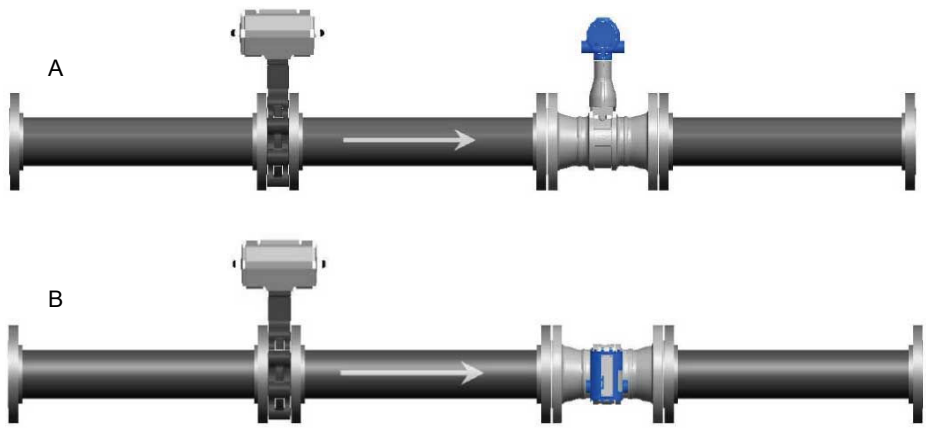

A. In plane
B. Out of plane

- An elbow is considered *in plane* when the shedder bar and elbow are aligned. The elbow is considered *out of plane* when the shedder bar and elbow are rotated 90°.

Figure 1-2: Single elbow

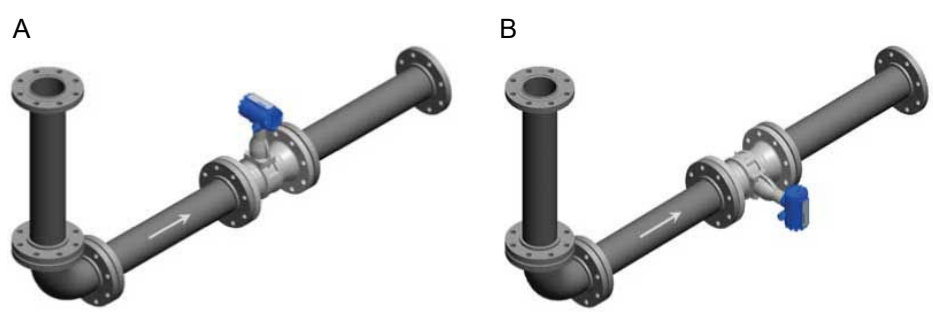

A. In plane
B. Out of plane

Similarly, double elbows are *in plane* when the are both aligned with the shedder bar and *out of plane* when they are not aligned with the shedder bar.

Figure 1-3: Double elbow same plane

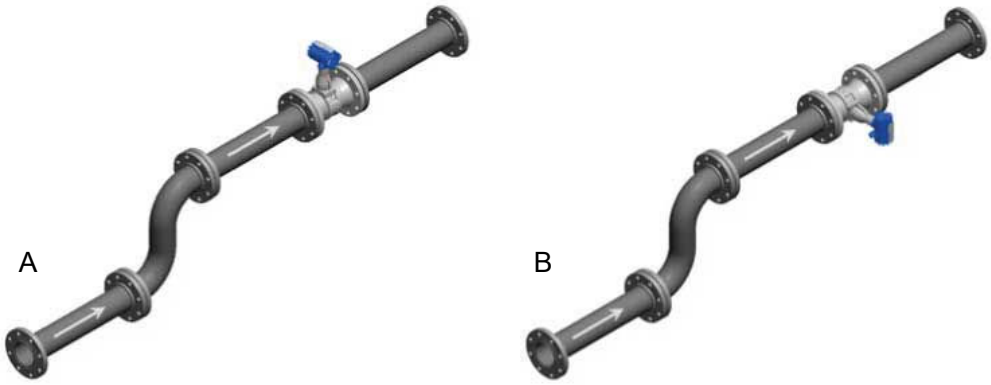

A. In plane
B. Out of plane

2 Correcting the output of the vortex meter

Topics covered in this chapter:

- *Fieldbus and HART software revisions 5.2.8 or earlier*
- *HART software revisions 5.3.1 or 7.2.1 and later*
- *Correction factor examples*

Correction factors can entered into the vortex flowmeter transmitter using AMS™ Device Manager, ProLink™ III v3 or a 475, AMS Trex(TM), or similar HART® Field Communicator.

For all Fieldbus devices and devices with HART software revisions 5.2.8 and earlier, the K-factor can be adjusted using the *Installation Effect* command. This command will adjust the compensated K-factor to account for any correction needed. The correction will be entered as a percentage of the K-factor shift. The possible range of the shift is +1.5% to -1.5%.

For devices with HART revision 5.3.1 or 7.2.1 and later, the correction factor will be entered using the *Meter Factor* command. This command works in a similar way to the *Installation Effect* command but has an inverse relationship to k-factor shift and an enterable range of 0.8 to 1.2. Entering a value of 0.8 represents a +20% shift in k-factor, a value of 1.0 represents a 0% shift in k-factor, and a value of 1.2 represents a -20% shift in k-factor.

2.1 Fieldbus and HART software revisions 5.2.8 or earlier

Using AMS Device Manager

Under the Sensor tab, enter the correction in the Install Effect field.

Figure 2-1: Using AMS Device Manager

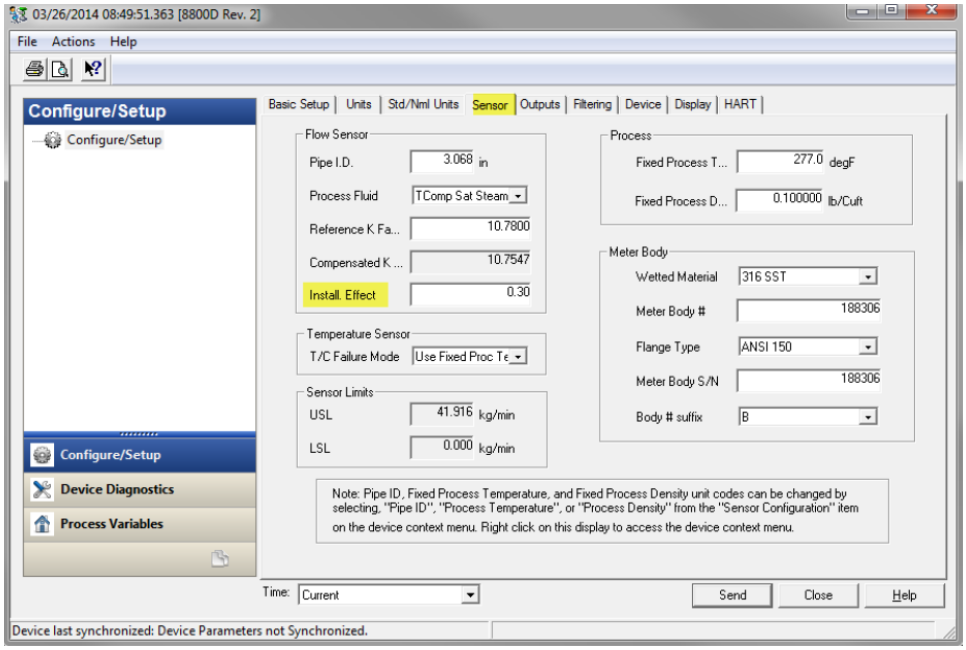

Using a 475 HART Field Communicator

Go to **Manual Setup** > **Sensor** > **Process** > **Installation Effect** and then enter the correction number in the field.

Figure 2-2: Using a 475 HART Field Communicator

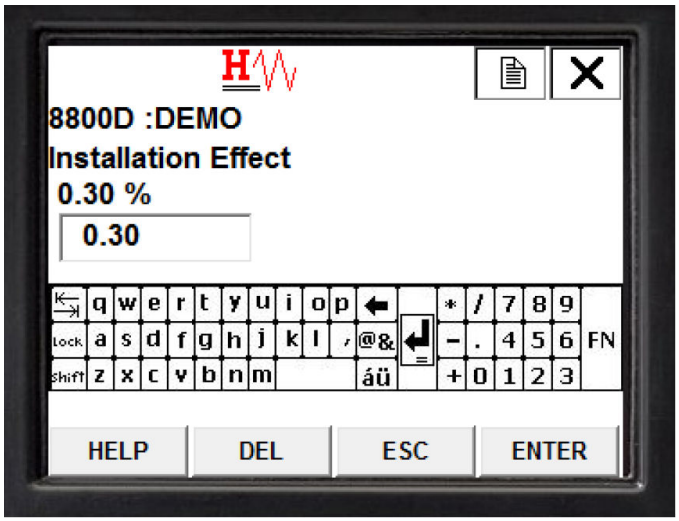

Using ProLink III

To enter the Installation Effect, select **Device Tools** > **Configuration** > **Device Setup** > **Installation Effect**.

Figure 2-3: Using ProLink III

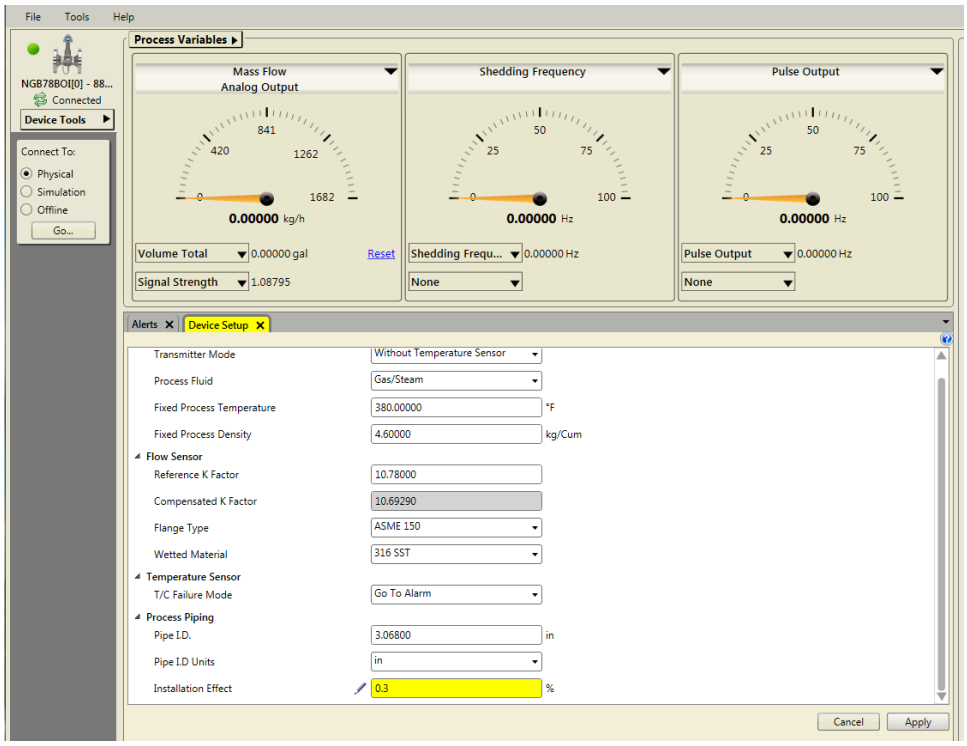

2.2 HART software revisions 5.3.1 or 7.2.1 and later

Using AMS Device Manager

Under the Sensor tab, enter the correction in the Meter Factor field. See Figure 1-4.

Figure 2-4: Using AMS Device Manager

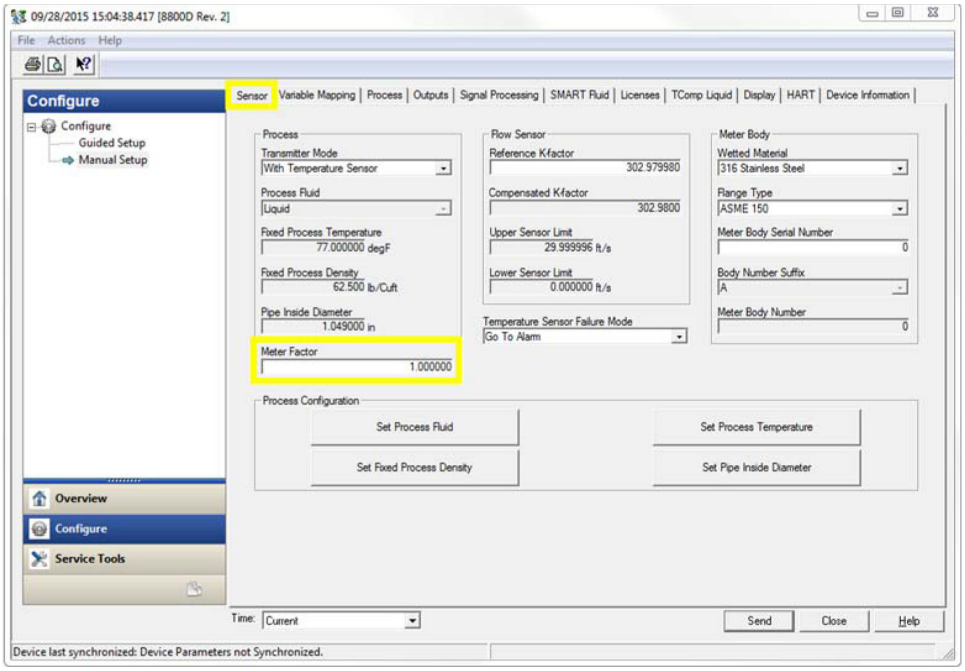

Using a 475 HART Field Communicator

Go to **Manual Setup** > **Sensor** > **Process** > **Meter Factor** and then enter the correction number in the field.

Figure 2-5: Using a 475 HART Field Communicator

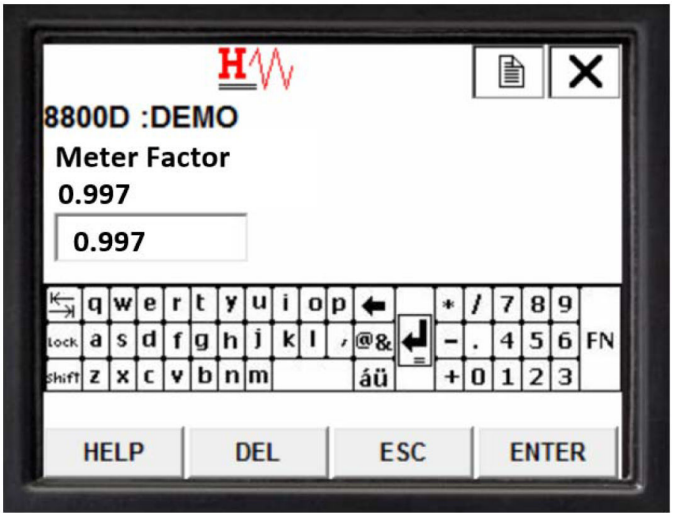

Using ProLink III

To enter the Installation Effect, select **Device Tools** > **Configuration** > **Device Setup** > **Meter Factor**.

Figure 2-6: Using ProLink III

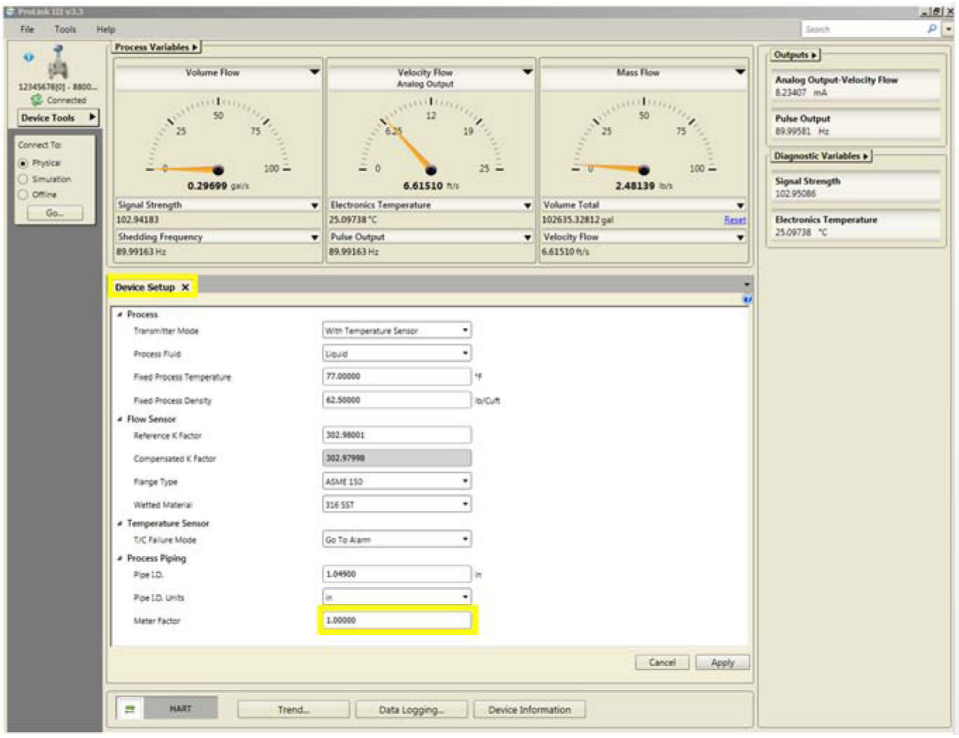

2.3 Correction factor examples

Example 1

The 8800 Vortex flowmeter is installed 15 pipe diameters downstream from a single 90° elbow, with the shedder bar in plane. Looking at Single Elbow Graph and following the IN PLANE line, the K-factor shift would be +0.3% at 15 pipe inside diameter.

To adjust the K-factor to correct for this shift, enter +0.3% into the Installation Effect field or 0.997 for devices utilizing Meter Factor.

Example 2

The 8800 Vortex flowmeter is installed 10 pipe diameters downstream from a butterfly valve, with the shedder bar out of plane. Looking at Butterfly Graph and following the OUT OF PLANE line, the K-factor shift would be -0.1% at 10 pipe inside diameter.

To adjust the K-factor to correct for this shift, enter -0.1% into the Installation Effect field or 1.001 for devices utilizing Meter Factor.

Figure 2-7: Single elbow

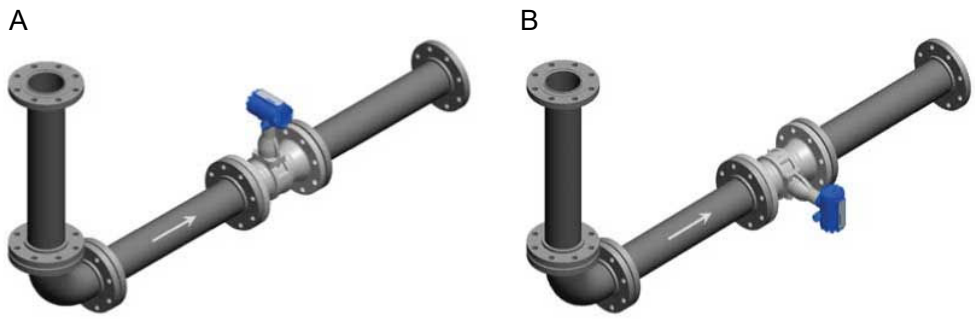

A. In plane
B. Out of plane

Figure 2-8: Single elbow graph

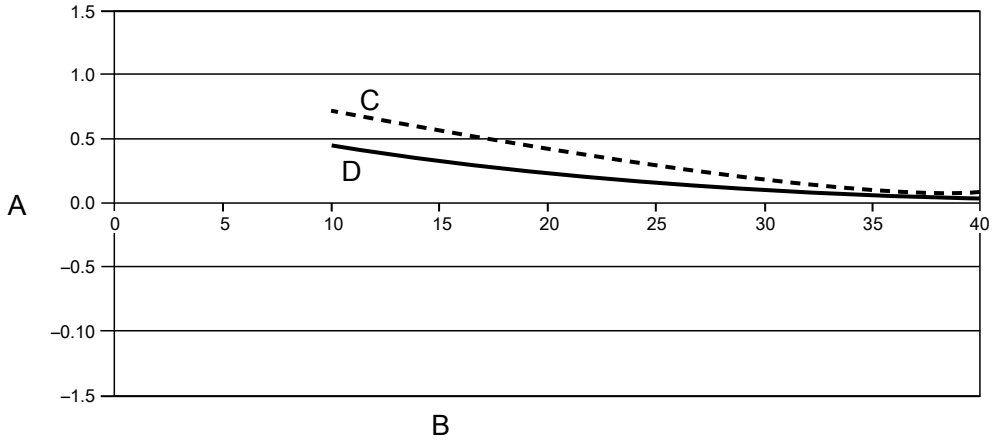

A. Percentage K-Factor shift
B. Upstream pipe diameters

Figure 2-9: Pipe expansion

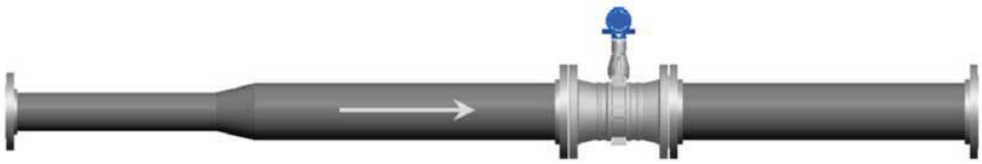

Figure 2-10: Pipe expansion graph

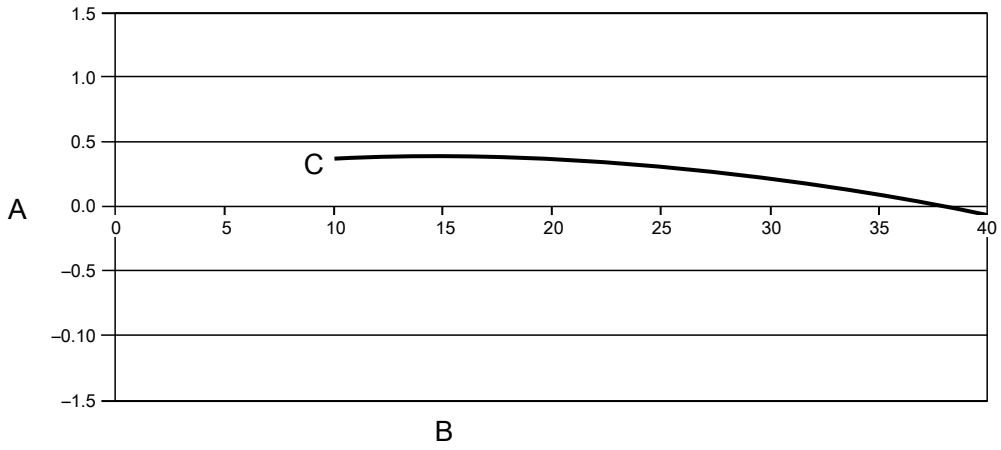

A. Percentage K-Factor shift
B. Upstream pipe diameters
K-Factor shift based on data collected with concentric pipe expander.

Figure 2-11: Double elbow same plane

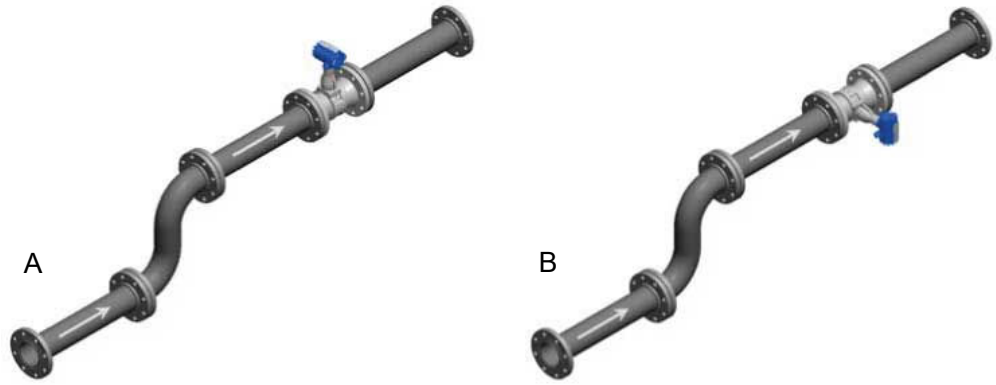

A. In plane
B. Out of plane

Figure 2-12: Double elbow same plane graph

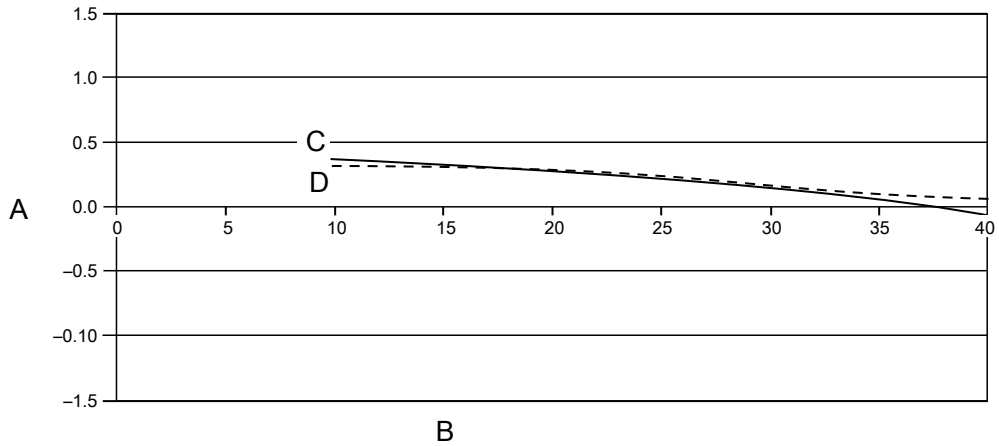

A. Percentage K-Factor shift
B. Upstream pipe diameters

Figure 2-13: Double elbow different plane

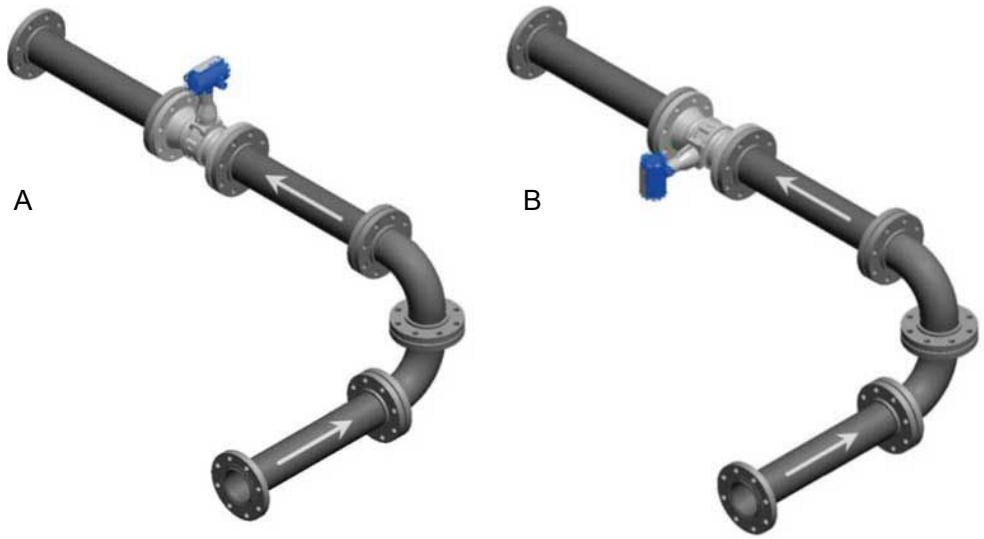

A. In plane
B. Out of plane

Figure 2-14: Double elbow different plane graph

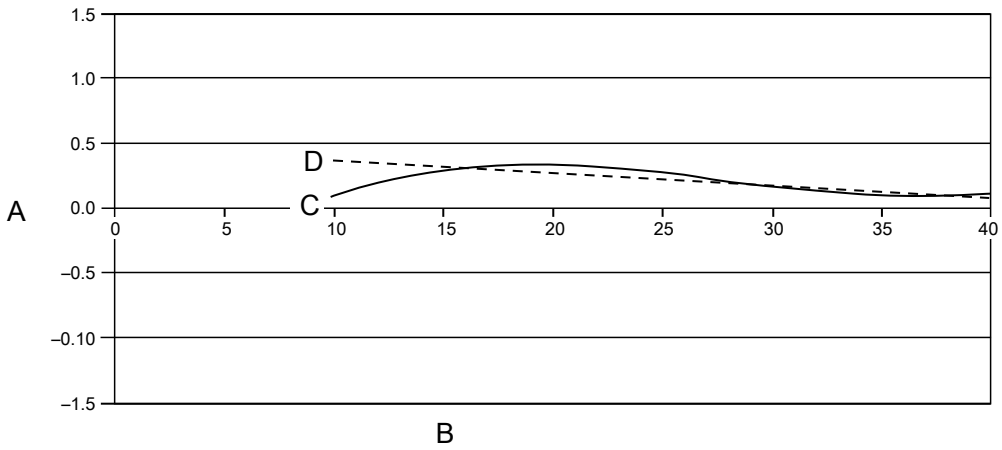

A. Percentage K-Factor shift
B. Upstream pipe diameters

Figure 2-15: Reducer

Figure 2-16: Reducer graph

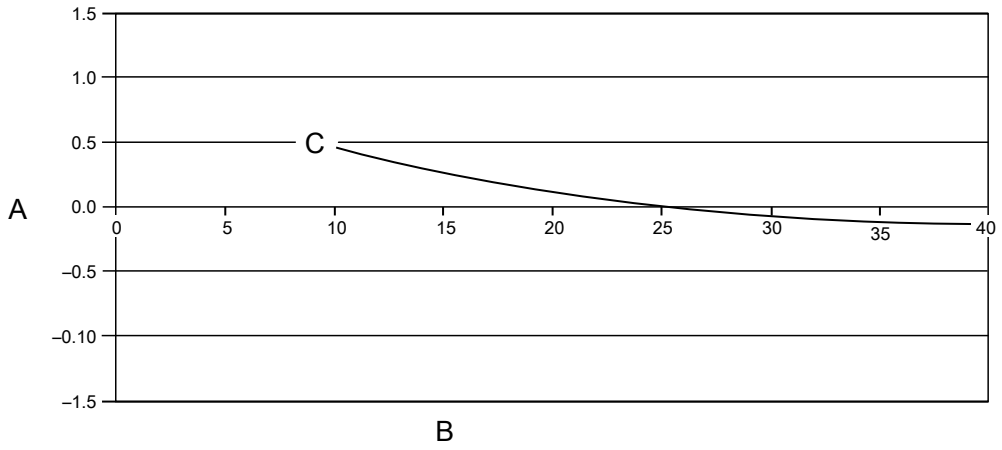

A. Percentage K-Factor shift
B. Upstream pipe diameters
K-Factor shift based on data collected with concentric pipe expander.

Figure 2-17: Butterfly valve

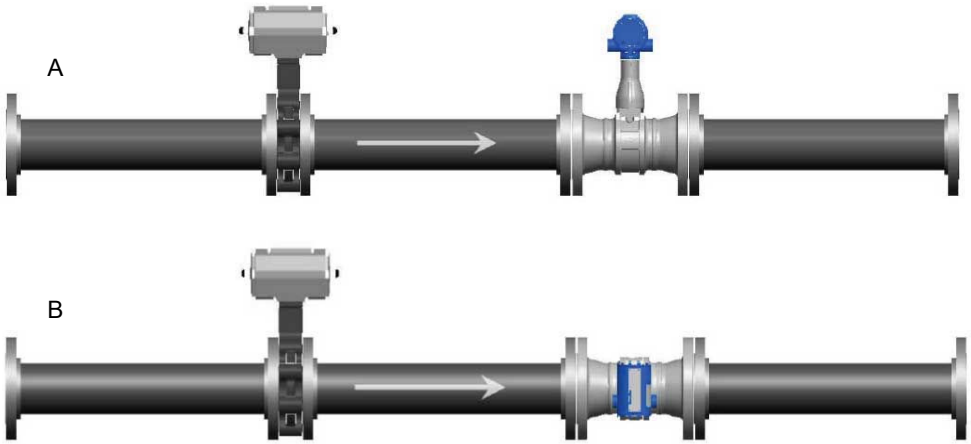

A. In plane
B. Out of plane

Figure 2-18: Butterfly valve graph

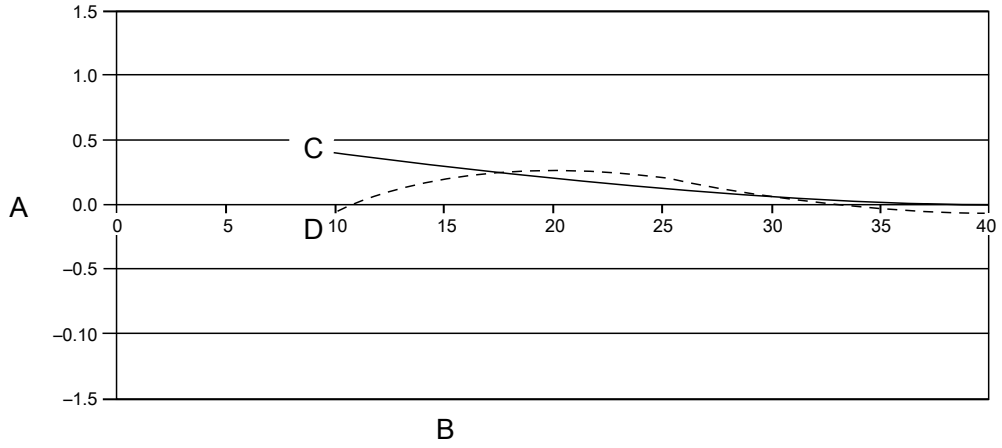

A. Percentage K-Factor shift

B. Upstream pipe diameters

3 Calculating upstream and downstream pipe diameters

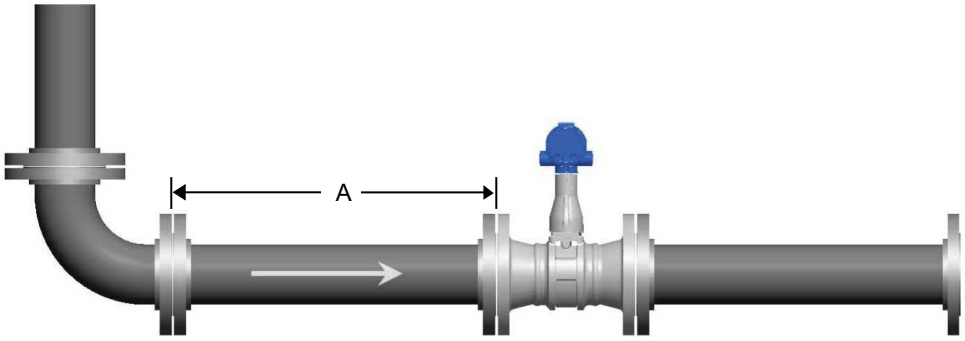

A. Pipe inside diameters calculated face to face

Note

When using a reducer-style flow meter, pipe inside diameters are calculated using the process pipe inside diameter not the meter body inside diameter.

00816-0100-3250
Rev HA
2017

Emerson Automation Solutions USA
7070 Winchester Circle
Boulder, Colorado USA 80301
T +1 303-527-5200
T +1 800-522-6277
F +1 303-530-8459
www.emerson.com

Emerson Automation Solutions Europe
Neonstraat 1
6718 WX Ede
The Netherlands
T +31 (0) 70 413 6666
F +31 (0) 318 495 556
www.micromotion.nl

Emerson Automation Solutions Asia
1 Pandan Crescent
Singapore 128461
Republic of Singapore
T +65 6777-8211
F +65 6770-8003

Emerson Automation Solutions United Kingdom
Emerson Process Management Limited
Horsfield Way
Bredbury Industrial Estate
Stockport SK6 2SU U.K.
T +44 0870 240 1978
F +44 0800 966 181

Emerson Automation Solutions Japan
1-2-5, Higashi Shinagawa
Shinagawa-ku
Tokyo 140-0002 Japan
T +81 3 5769-6803
F +81 3 5769-6844

ROSEMOUNT™

EMERSON™